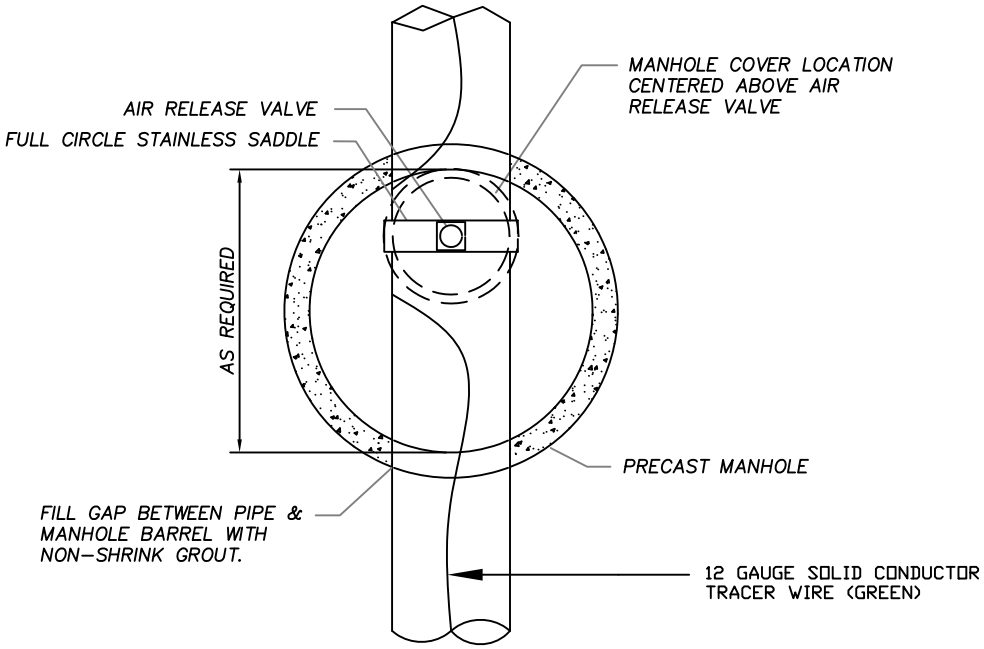

PLAN VIEW

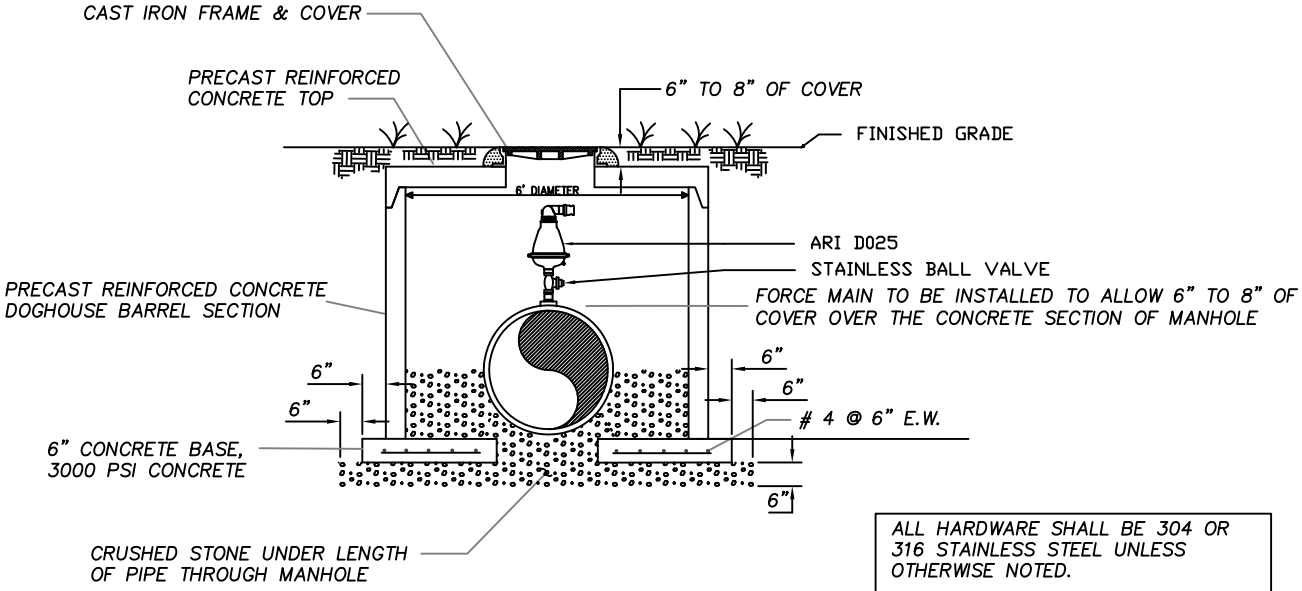

ALL HARDWARE SHALL BE 304 OR 316 STAINLESS STEEL UNLESS OTHERWISE NOTED.

MANHOLE INTERIOR AND PIPES SHALL BE LINED WITH RAVEN 405 EPOXY LINER.

SECTION VIEW

AIR RELEASE VALVE AND MANHOLE

NTS

SEWER PANEL 5A

BERKELEY COUNTY WATER AND SANITATION

POTABLE WATER & SANITARY SEWER STANDARDS

REVISED 04/05/09